ACTIVE AERIAL POWER SUPPLY BOARD

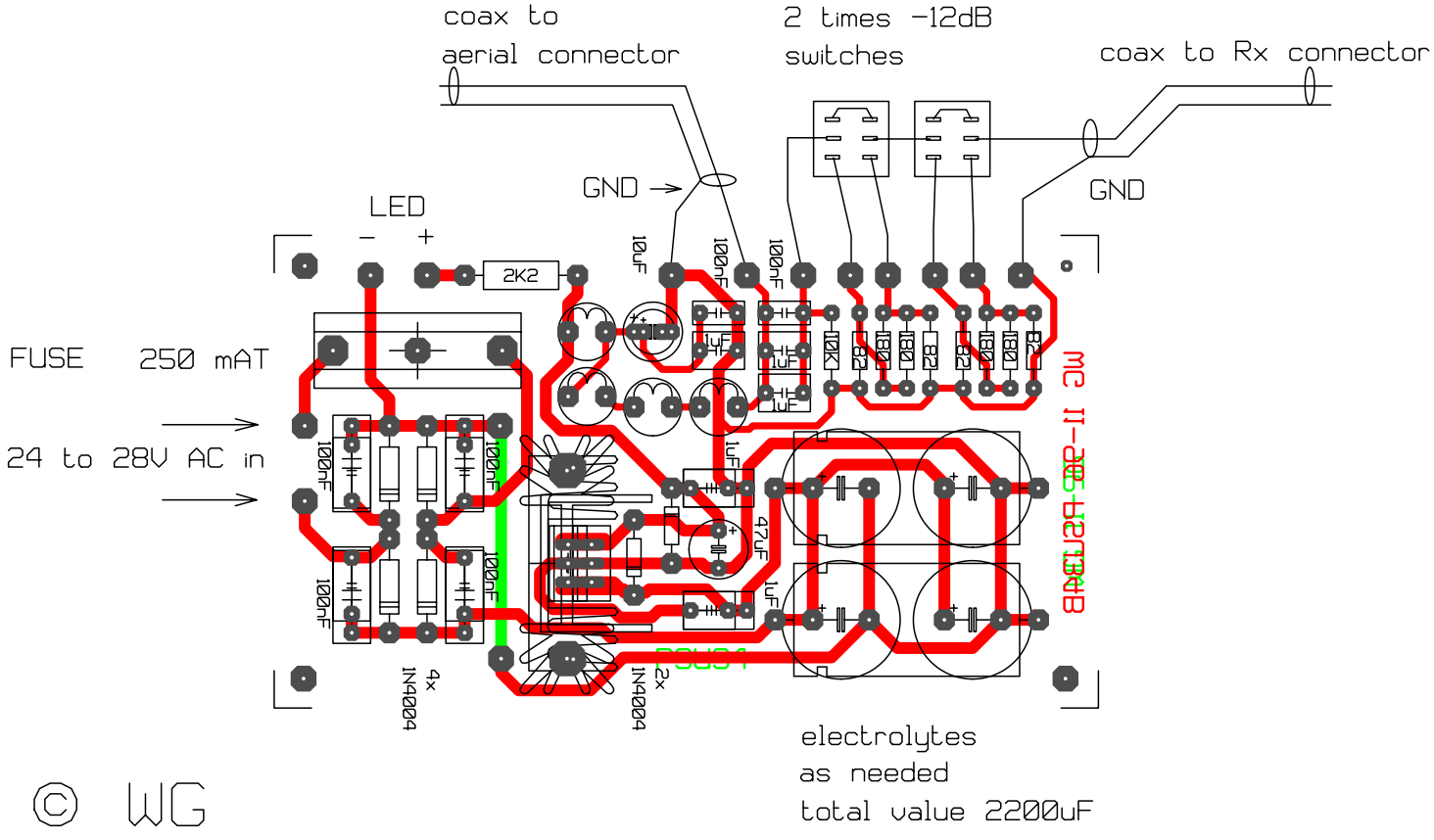

© WG