# ACTIVE AERIAL POWER SUPPLY BOARD

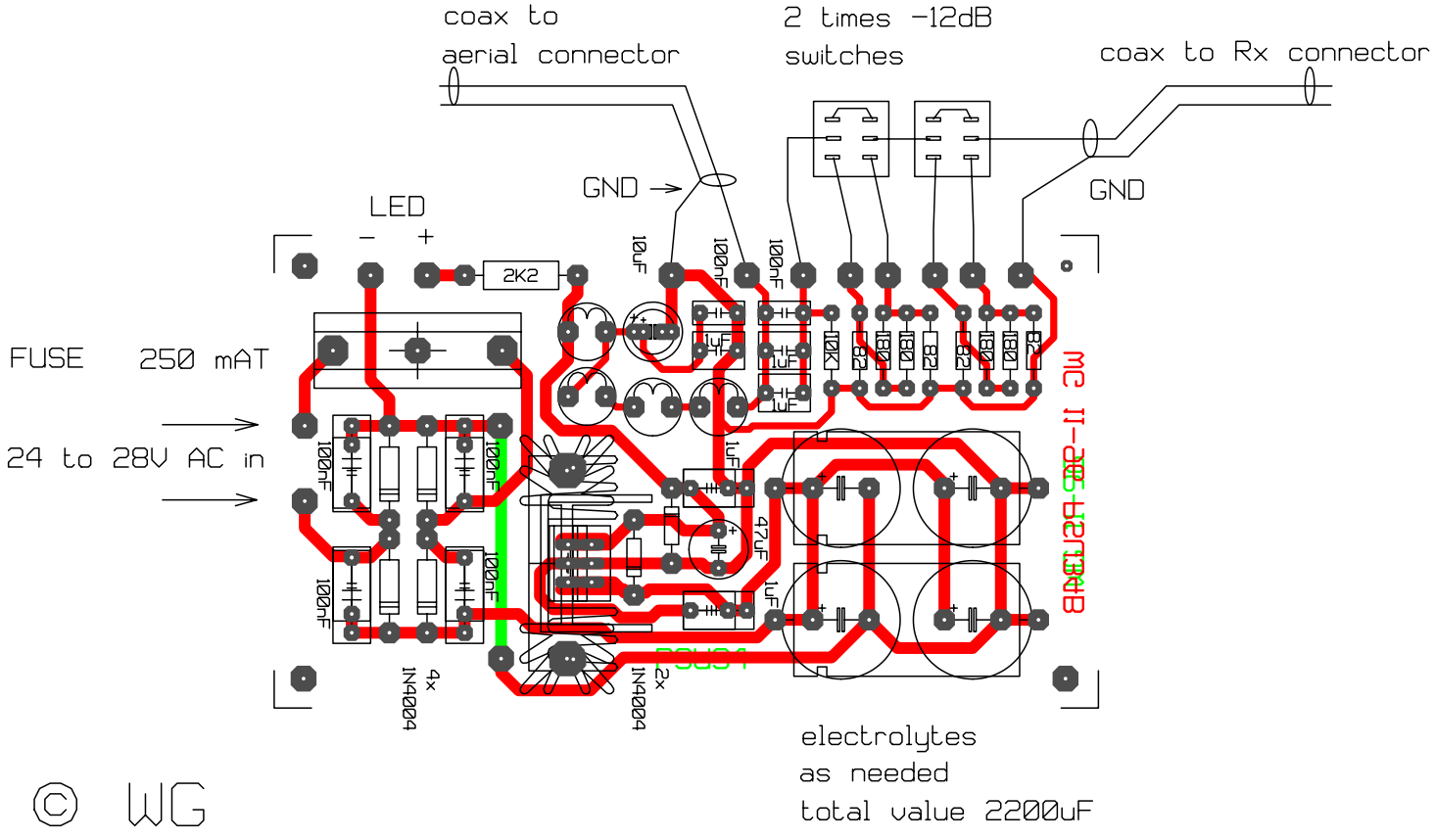


© WG