Door EZNEC berekend stralings eigenschappen voor een dipool antenne van PE1MWB

Fig: 1

Vertical PE1MWB Dipole

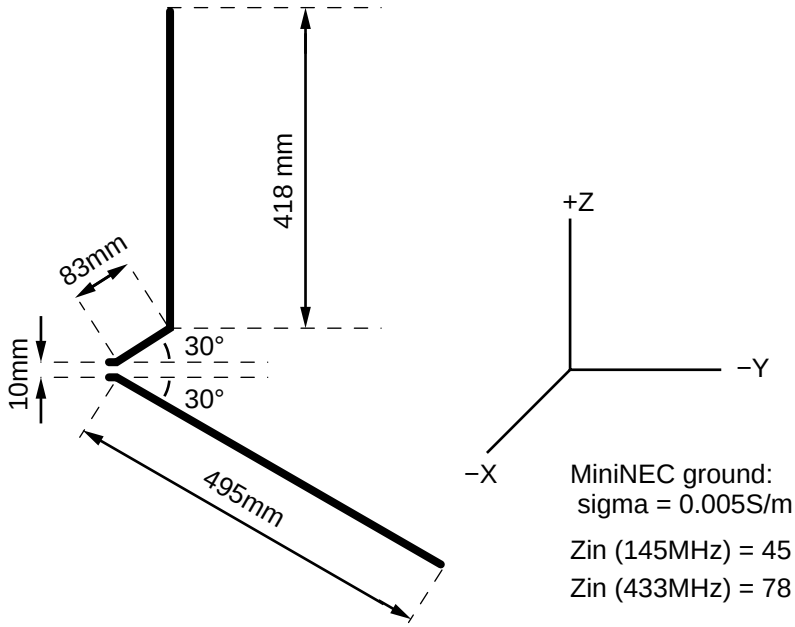

MiniNEC ground:
sigma = 0.005S/m, Er = 13

Zin (145MHz) = 45 − j28

Zin (433MHz) = 78 − j86

Configuration per e−mail from Jeroen Slagboom, PE1MWB, dated 1 okt 2006

Both elements round, loss−free, diameter 3 mm

PA7XG 9 okt 2006

PE1MWB dipole in free space, azimuth

Fig: 2a

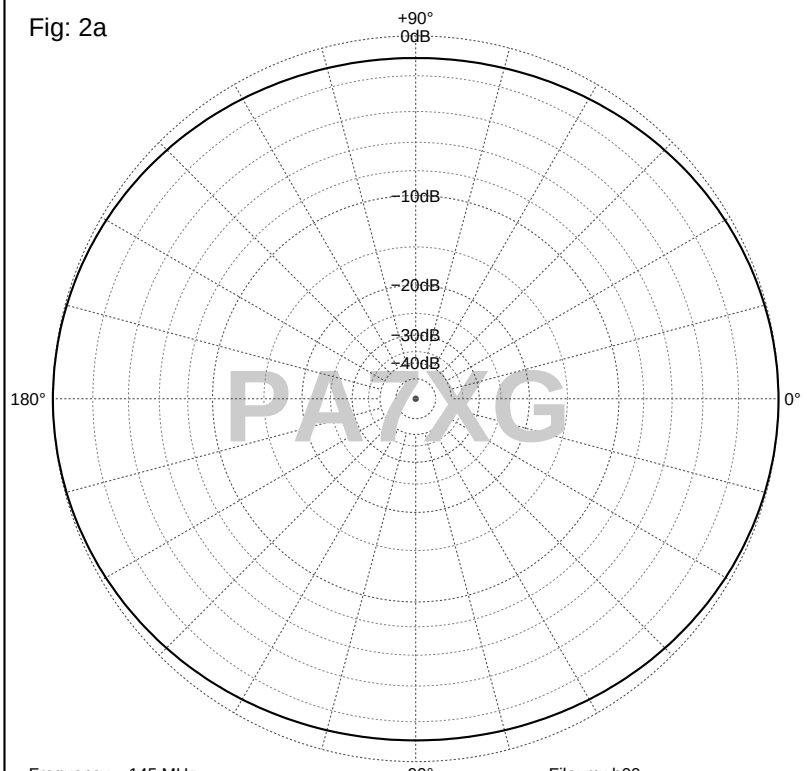

Frequency = 145 MHz
Total far field, maximum gain = 1.73 dBi
Azimuth Pattern Elevation angle = 0 deg

File: mwb00
Pattern computed by EZNEC 2.0
Drawn by ezff2ps, 09okt2006

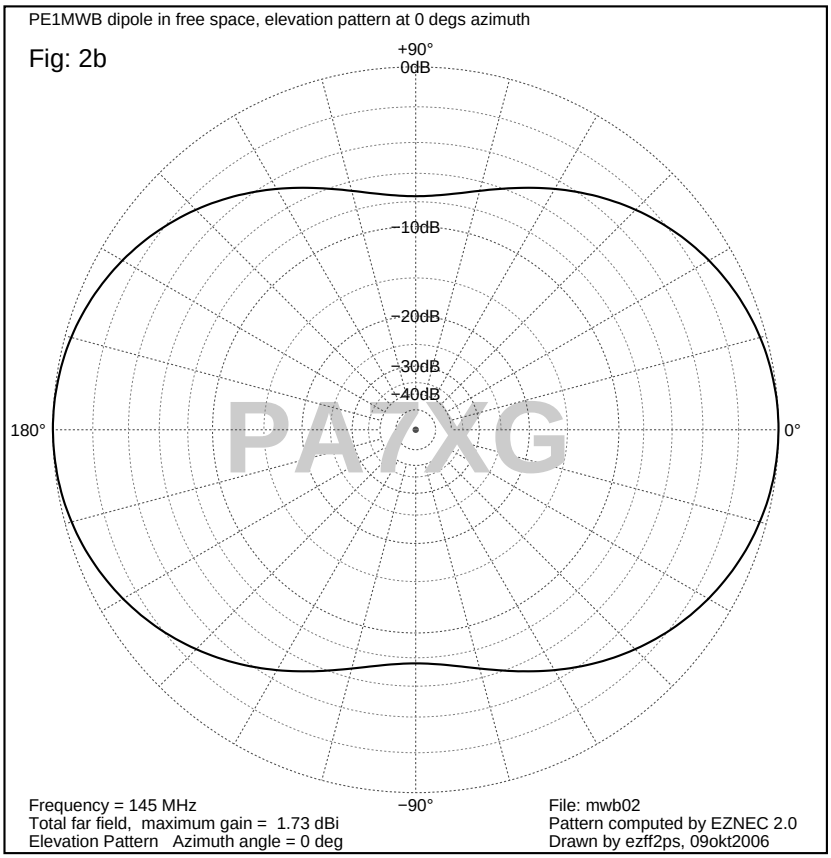
PE1MWB dipole in free space, elevation pattern at 0 degs azimuth
Fig: 2b
+90°
0dB
−10dB
−20dB
−30dB
−40dB
180°
0°
−90°
PA7XG
Frequency = 145 MHz
Total far field, maximum gain = 1.73 dBi
Elevation Pattern Azimuth angle = 0 deg
File: mwb02
Pattern computed by EZNEC 2.0
Drawn by ezff2ps, 09okt2006

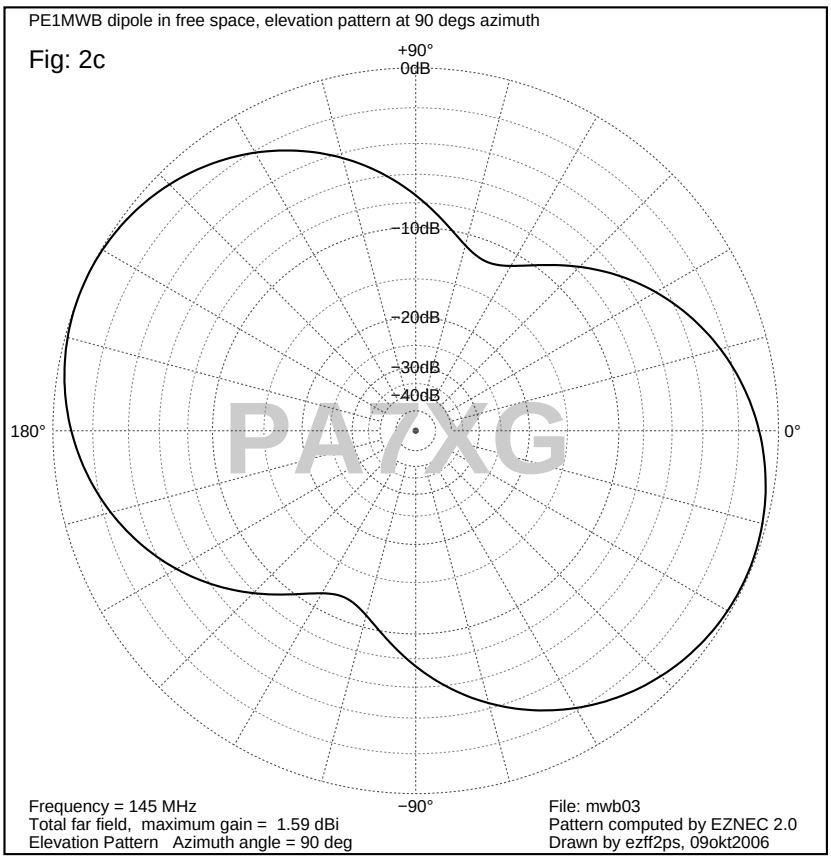
PE1MWB dipole in free space, elevation pattern at 90 degs azimuth
Fig: 2c
+90°
0dB
−10dB
−20dB
−30dB
−40dB
180°
0°
−90°
PA7XG
Frequency = 145 MHz
Total far field, maximum gain = 1.59 dBi
Elevation Pattern Azimuth angle = 90 deg
File: mwb03
Pattern computed by EZNEC 2.0
Drawn by ezff2ps, 09okt2006

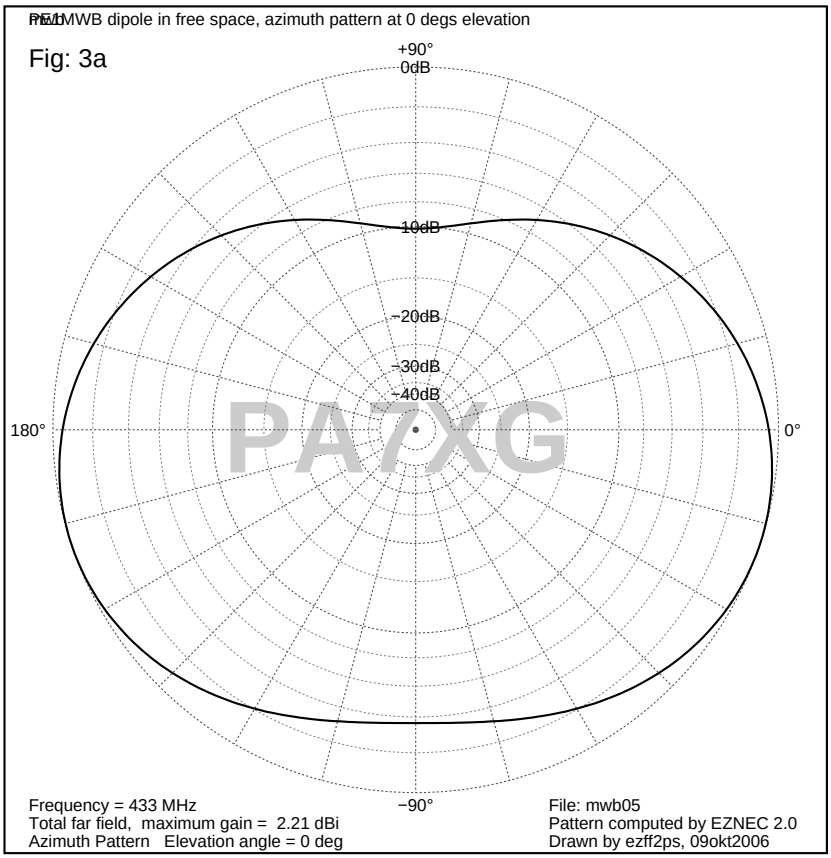
PE1MWB dipole in free space, azimuth pattern at 0 degs elevation
Fig: 3a
+90°
0dB
-10dB
-20dB
-30dB
-40dB
180°
0°
-90°
PA7XG
Frequency = 433 MHz
Total far field, maximum gain = 2.21 dBi
Azimuth Pattern Elevation angle = 0 deg
File: mwb05
Pattern computed by EZNEC 2.0
Drawn by ezff2ps, 09okt2006

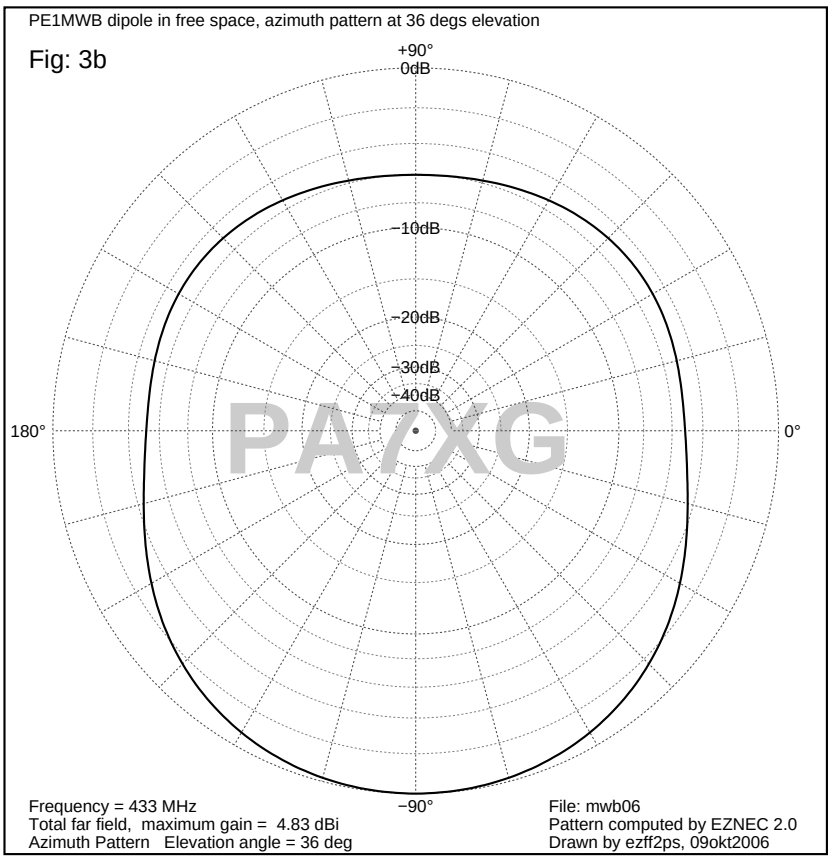
PE1MWB dipole in free space, azimuth pattern at 36 degs elevation
Fig: 3b
+90°
0dB
-10dB
-20dB
-30dB
-40dB
180°
0°
-90°
PA7XG
Frequency = 433 MHz
Total far field, maximum gain = 4.83 dBi
Azimuth Pattern Elevation angle = 36 deg
File: mwb06
Pattern computed by EZNEC 2.0
Drawn by ezff2ps, 09okt2006

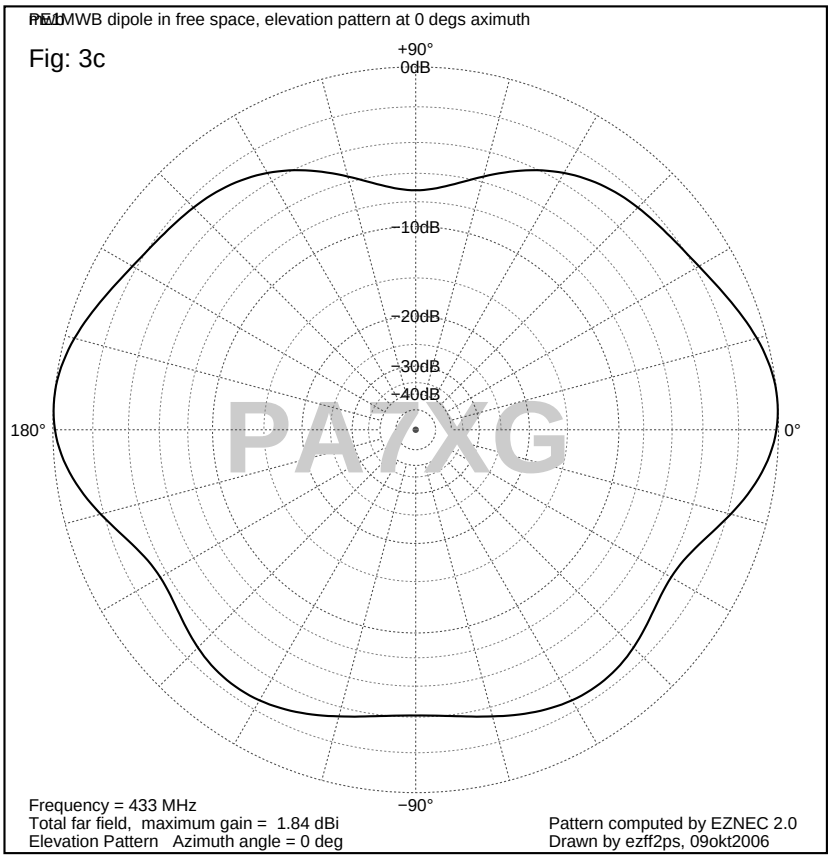
PE1MWB dipole in free space, elevation pattern at 0 degs aximuth
Fig: 3c
+90°
0dB
−10dB
−20dB
−30dB
−40dB
180°
0°
−90°
PA7XG
Frequency = 433 MHz
Total far field, maximum gain = 1.84 dBi
Elevation Pattern Azimuth angle = 0 deg
Pattern computed by EZNEC 2.0
Drawn by ezff2ps, 09okt2006

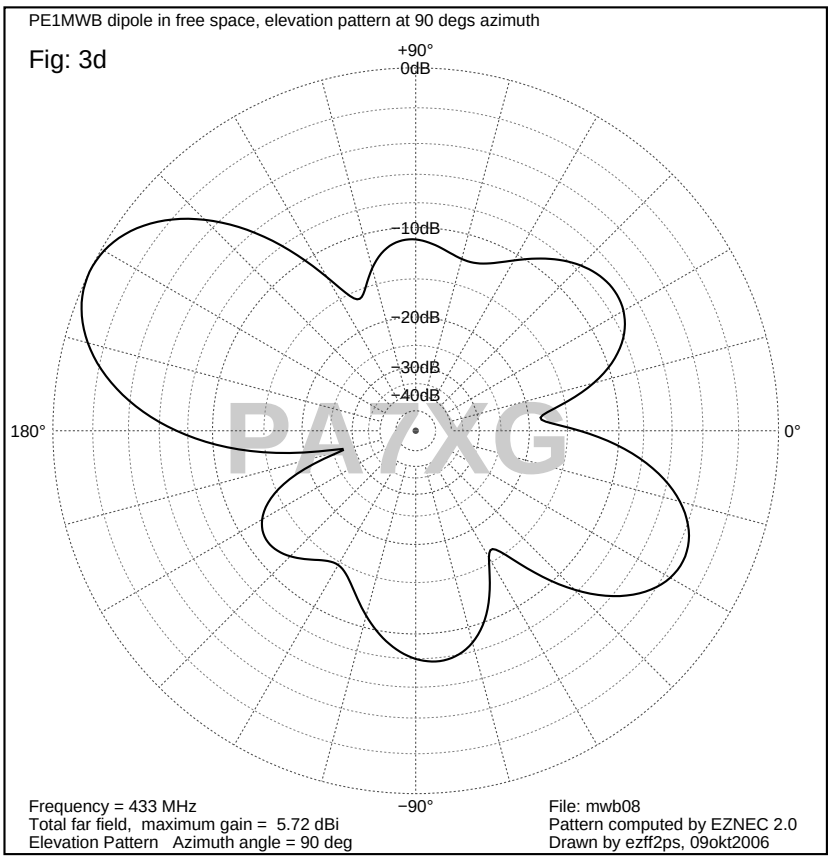
PE1MWB dipole in free space, elevation pattern at 90 degs azimuth
Fig: 3d
+90°
0dB
−10dB
−20dB
−30dB
−40dB
180°
0°
−90°
PA7XG
Frequency = 433 MHz
Total far field, maximum gain = 5.72 dBi
Elevation Pattern Azimuth angle = 90 deg
File: mwb08
Pattern computed by EZNEC 2.0
Drawn by ezff2ps, 09okt2006

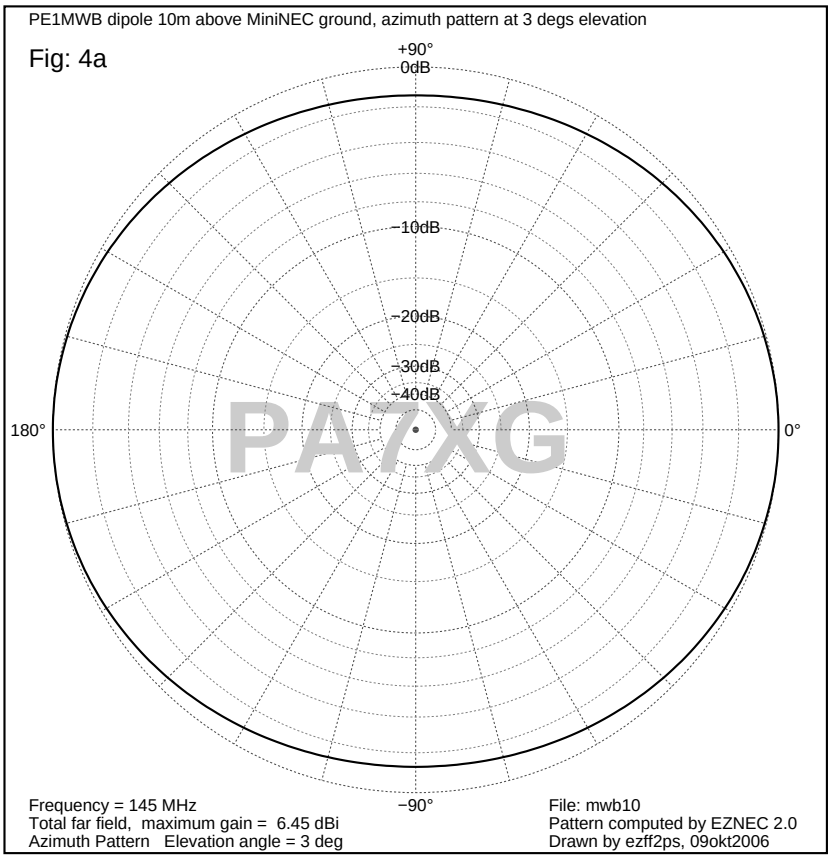
PE1MWB dipole 10m above MiniNEC ground, azimuth pattern at 3 degs elevation
Fig: 4a
+90°
0dB
−10dB
−20dB
−30dB
−40dB
180°
0°
−90°
PA7XG
Frequency = 145 MHz
Total far field, maximum gain = 6.45 dBi
Azimuth Pattern Elevation angle = 3 deg
File: mwb10
Pattern computed by EZNEC 2.0
Drawn by ezff2ps, 09okt2006

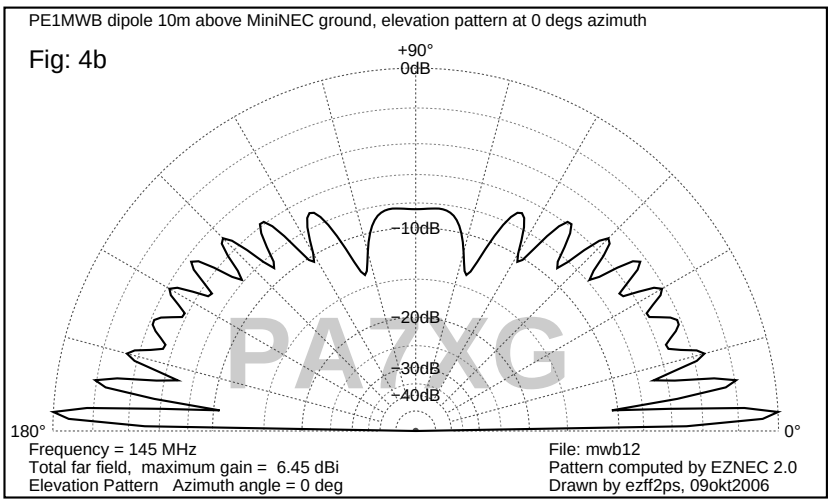
PE1MWB dipole 10m above MiniNEC ground, elevation pattern at 0 degs azimuth
Fig: 4b
+90°
0dB
−10dB
−20dB
−30dB
−40dB
180°
0°
PA7XG
Frequency = 145 MHz
Total far field, maximum gain = 6.45 dBi
Elevation Pattern Azimuth angle = 0 deg
File: mwb12
Pattern computed by EZNEC 2.0
Drawn by ezff2ps, 09okt2006

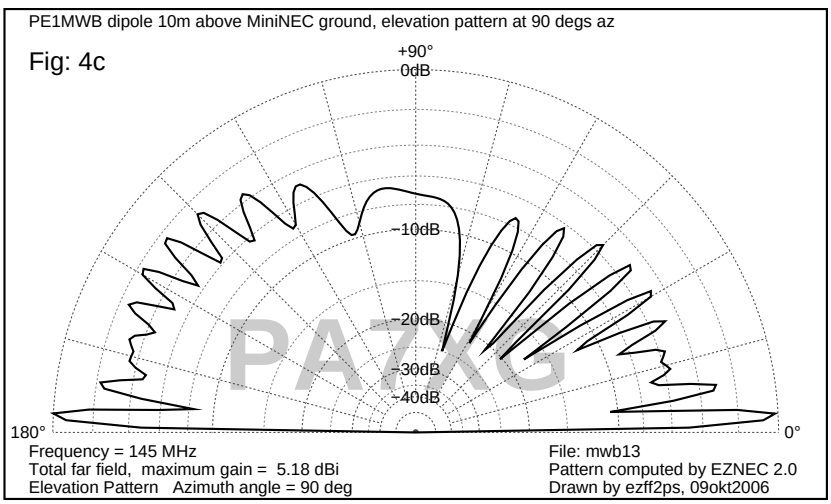
PE1MWB dipole 10m above MiniNEC ground, elevation pattern at 90 degs az
Fig: 4c
+90°
0dB
−10dB
−20dB
−30dB
−40dB
180°
0°
PA7XG
Frequency = 145 MHz
Total far field, maximum gain = 5.18 dBi
Elevation Pattern Azimuth angle = 90 deg
File: mwb13
Pattern computed by EZNEC 2.0
Drawn by ezff2ps, 09okt2006

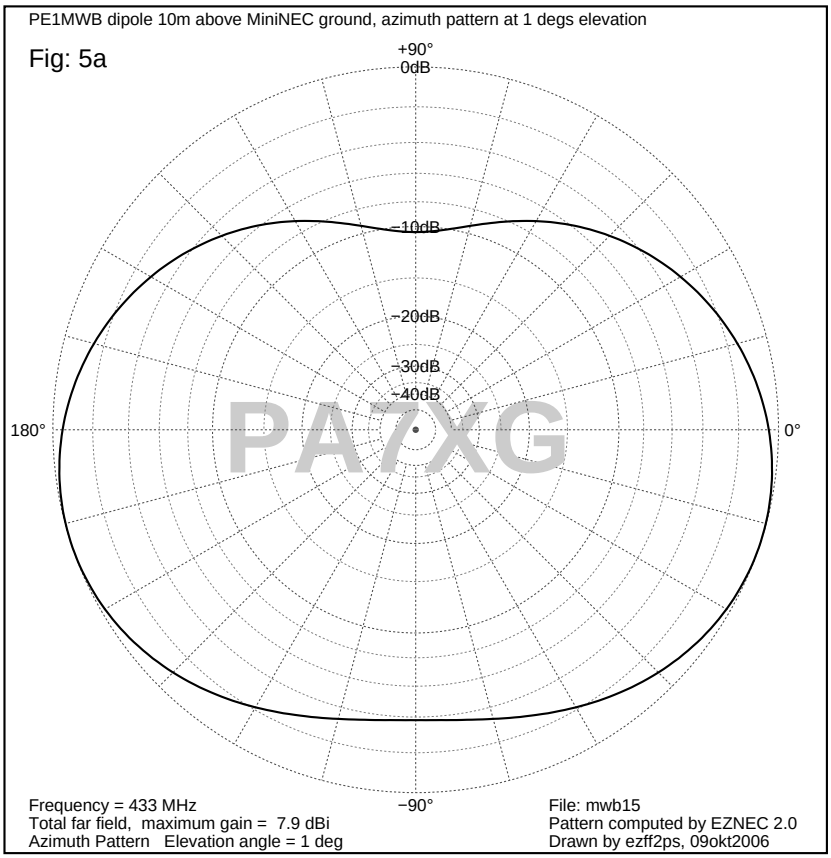
PE1MWB dipole 10m above MiniNEC ground, azimuth pattern at 1 degs elevation
Fig: 5a
+90°
0dB
−10dB
−20dB
−30dB
−40dB
180°
0°
−90°
PA7XG
Frequency = 433 MHz
Total far field, maximum gain = 7.9 dBi
Azimuth Pattern Elevation angle = 1 deg
File: mwb15
Pattern computed by EZNEC 2.0
Drawn by ezff2ps, 09okt2006

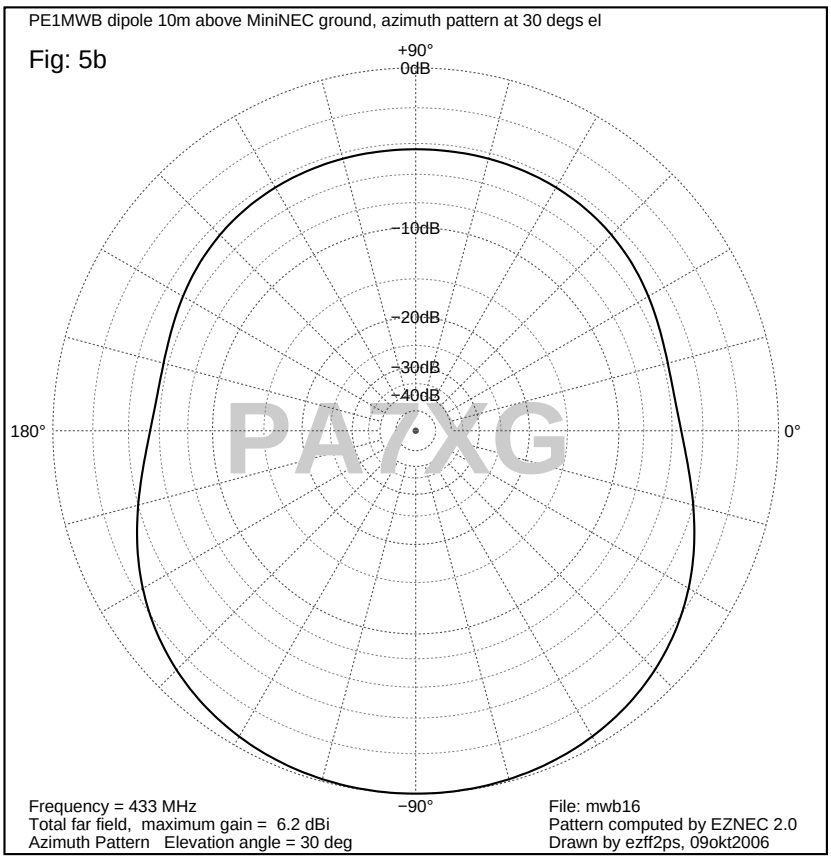
PE1MWB dipole 10m above MiniNEC ground, azimuth pattern at 30 degs el
Fig: 5b
+90°
0dB
−10dB
−20dB
−30dB
−40dB
180°
0°
−90°
PA7XG
Frequency = 433 MHz
Total far field, maximum gain = 6.2 dBi
Azimuth Pattern Elevation angle = 30 deg
File: mwb16
Pattern computed by EZNEC 2.0
Drawn by ezff2ps, 09okt2006

PE1MWB dipole 10m above MiniNEC ground, elevation pattern at 0 degs azimuth

Fig: 5c

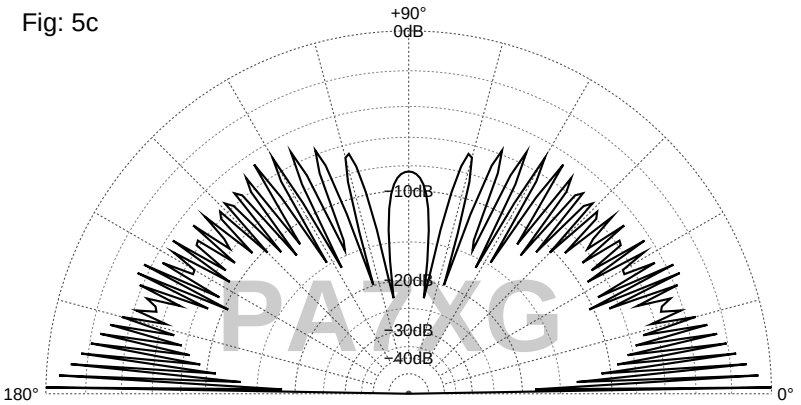

Frequency = 433 MHz
Total far field, maximum gain = 7.43 dBi
Elevation Pattern Azimuth angle = 0 deg

File: mwb17
Pattern computed by EZNEC 2.0
Drawn by ezff2ps, 09okt2006

PE1MWB dipole 10m above MiniNEC ground, elevations pattern at 90 degs azimuth

Fig: 5d

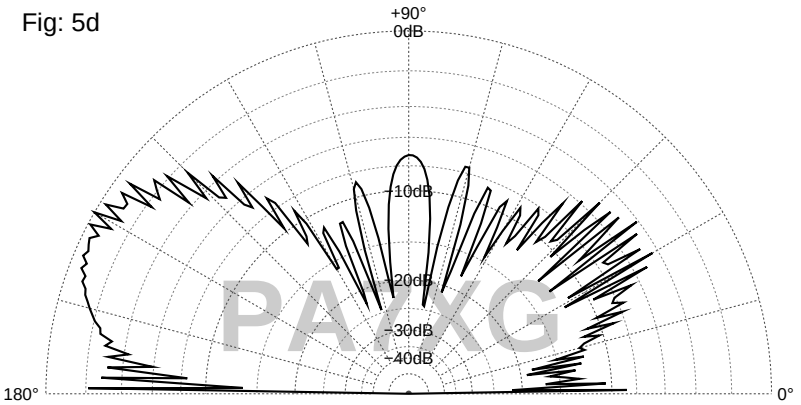

Frequency = 433 MHz
Total far field, maximum gain = 6.2 dBi
Elevation Pattern Azimuth angle = 90 deg

File: mwb18
Pattern computed by EZNEC 2.0
Drawn by ezff2ps, 09okt2006

PE1MWB dipole 10m above MiniNEC ground, elevations pattern at 45 degs azimuth

Fig: 5e

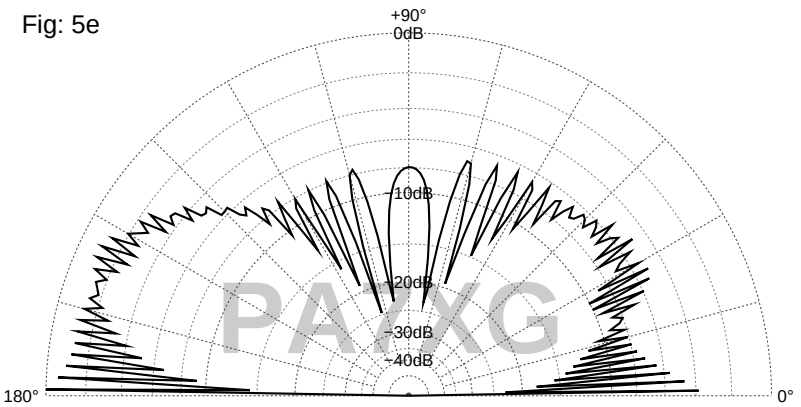

Frequency = 433 MHz
Total far field, maximum gain = 6.94 dBi
Elevation Pattern Azimuth angle = 45 deg

File: mwb19
Pattern computed by EZNEC 2.0
Drawn by ezff2ps, 09okt2006